REVISIONS			
REV.	DESCRIPTION	DATE	APPROVED

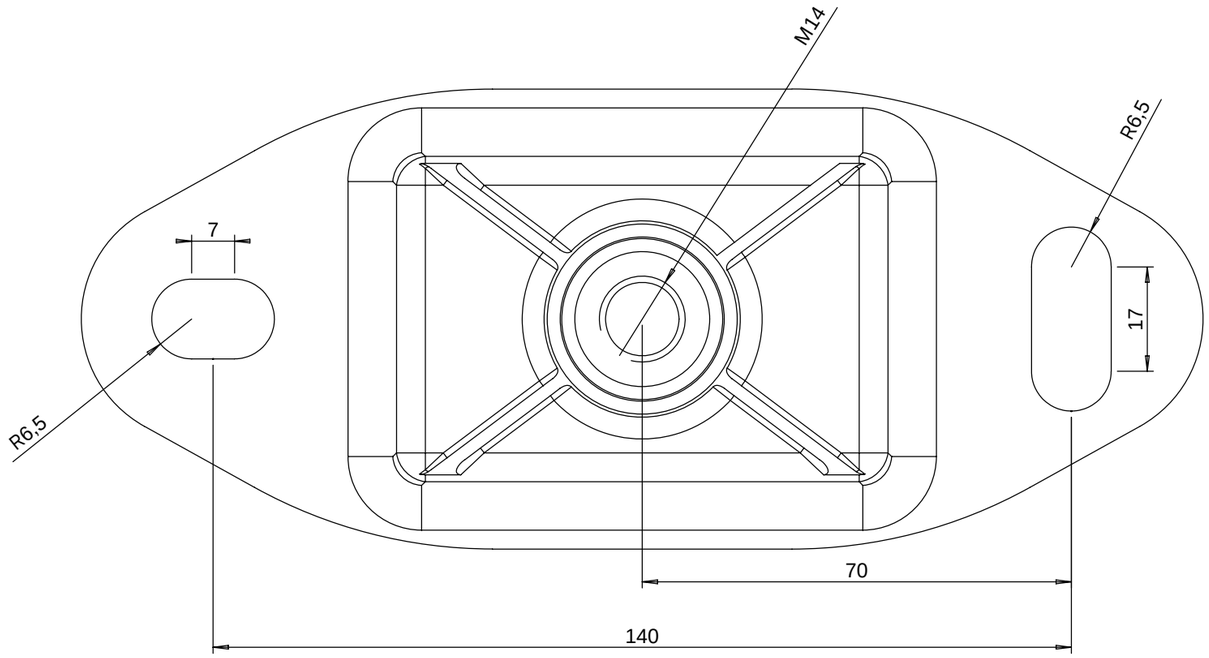

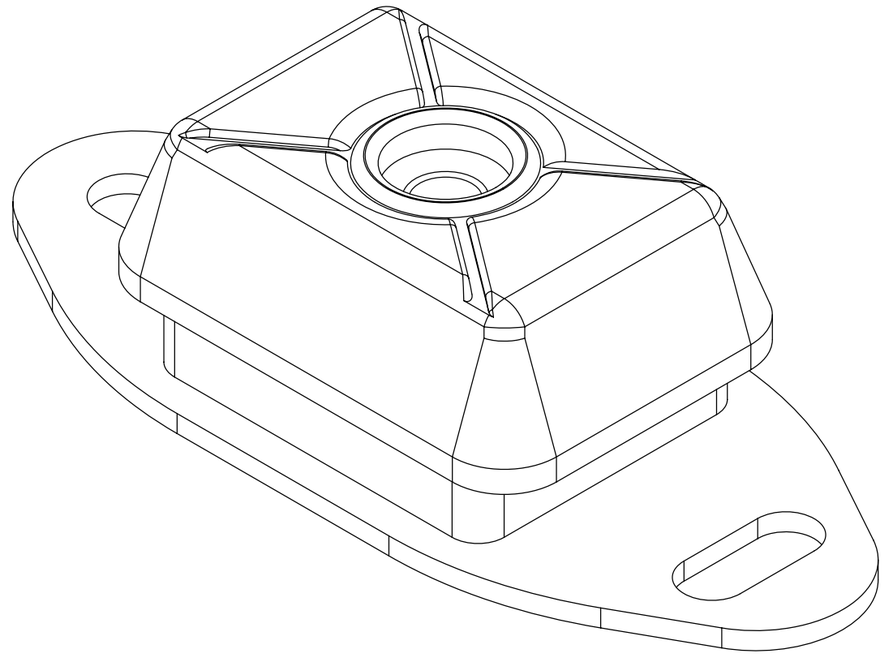

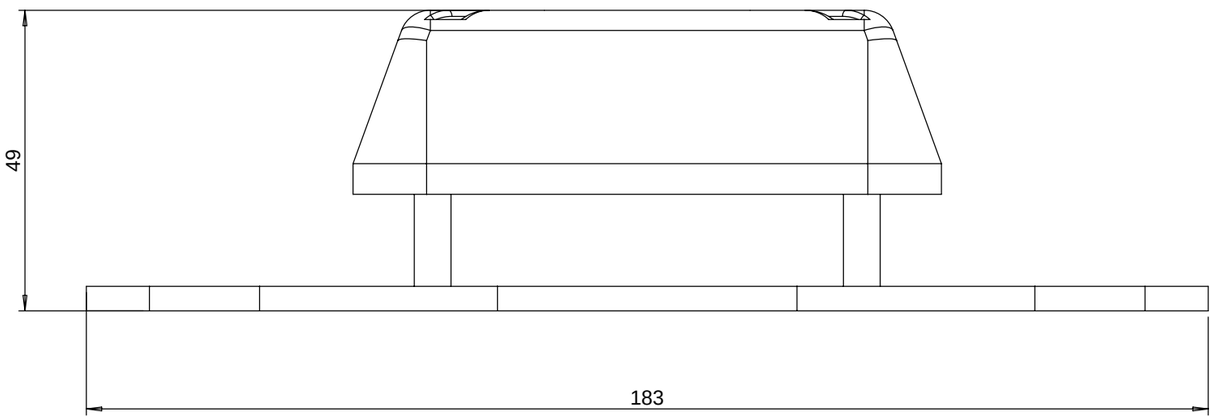

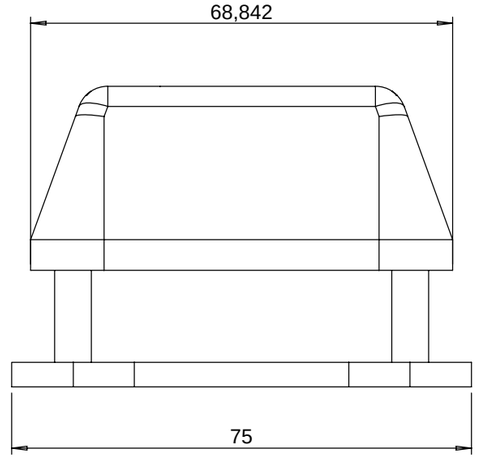

UNLESS OTHERWISE SPECIFIED:
Chamfer sharp edges
Roughness acc. to NEN3634
Dimensions tol. acc. to DIN7168
Form and place tolerances acc. to NEN-ISO 1101

Projection : Third angle
Units : mm

DO NOT SCALE DRAWING

REVISION

MASTERVOLT
TAILOR MADE ENERGY

	NAME	SIGNATURE	DATE
DRAWN	rdr		6-6-2007
CHK'D			
APPV'D			
MFG			
Q.A			

TITLE:

MATERIAL:

WEIGHT:

DWG NO. 50230553 Trilingsdemper M25 45 shore

A3

SCALE:1:1

SHEET 1 OF 1